NOKIA

The future of Public Safety

Ulrich Rehfuess
Head of Spectrum Policy

 © Nokia 2016

Realizing the future of Public Safety today

Evolution of mission-critical communications

- Data and video driven applications
- Common platforms and services to improve flexibility, data and resource sharing, analytics and cooperation between different governmental agencies

Broadband-based mission-critical network

- Standardized technology
- Benefiting from a global technology ecosystem that can bring true economies of scale

© Nokia 2016
NOKIA

A future with data needs

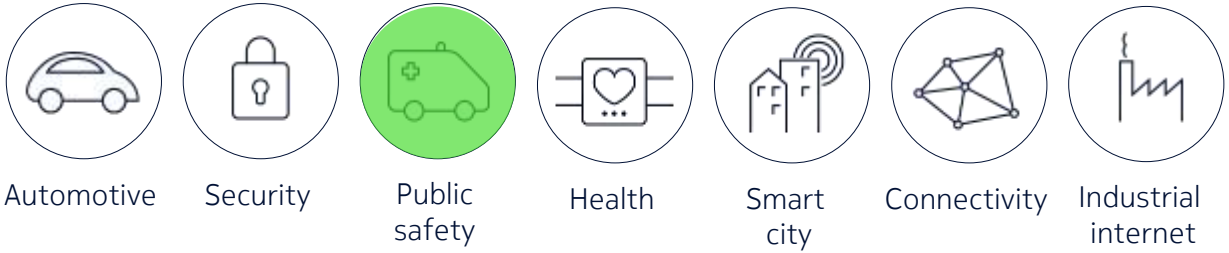

Public Safety examples

- Video analytics
- Sound analytics
- Situational awareness
- Video orchestration
- Road safety systems
- Flood warning systems
- Wearable technology for the safety of first responders and firefighters

© Nokia 2016

NOKIA

The next steps of services on mission-critical networks

Augmented reality capabilities

Monitoring of first responder bio-vital

Tracking of first responders position during incidents

Personal protective equipment

© Nokia 2016

Moving voice onto LTE PPDR networks

Group communication evolution

- Push-to-Talk (PTT) over LTE
- Advanced Push-to-Video (PTV) solution
- Turn mobile device into dispatch-controlled CCTV endpoint
- Dispatch console for mission control
- Ready for 3GPP mission-critical PTT (MCPTT)
- Geographic information system integration

Benefits

- Evolution path from existing voice services
- Voice services enhanced with video applications
- Incident reporting for enhanced visual awareness at the command center
- Remote applications management
- Location awareness

© Nokia 2016

NOKIA

Providing mission and business critical services

With a portfolio for all components

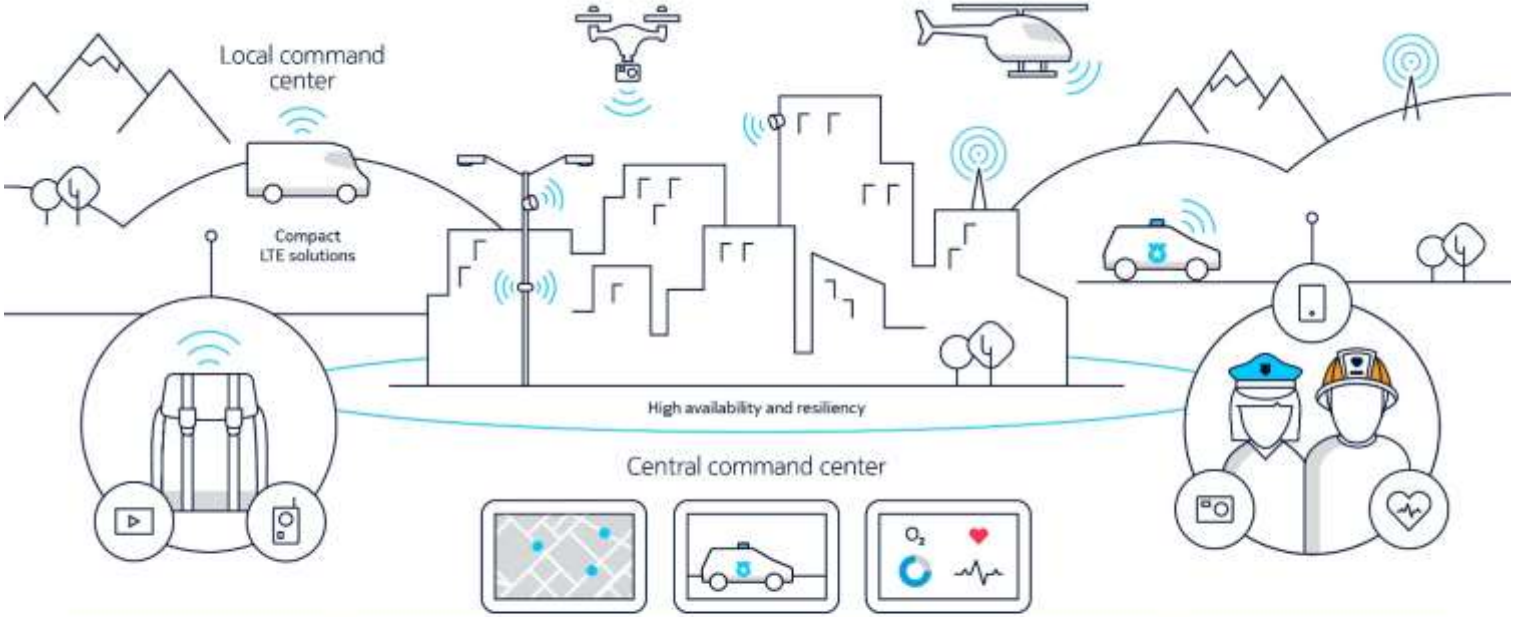

LTE radio and Core network
Real-time data and video applications for enhanced situational awareness

Secure IP/MPLS over microwave and optical
Providing more bandwidth to support mobile broadband applications

End-to-end security
For all network layers, applications and devices

Professional services
For meeting the specific needs of critical communications customers

Industry-specific
Devices, applications, and interworking functions for legacy systems

© Nokia 2016

LTE for Public Safety in 3GPP

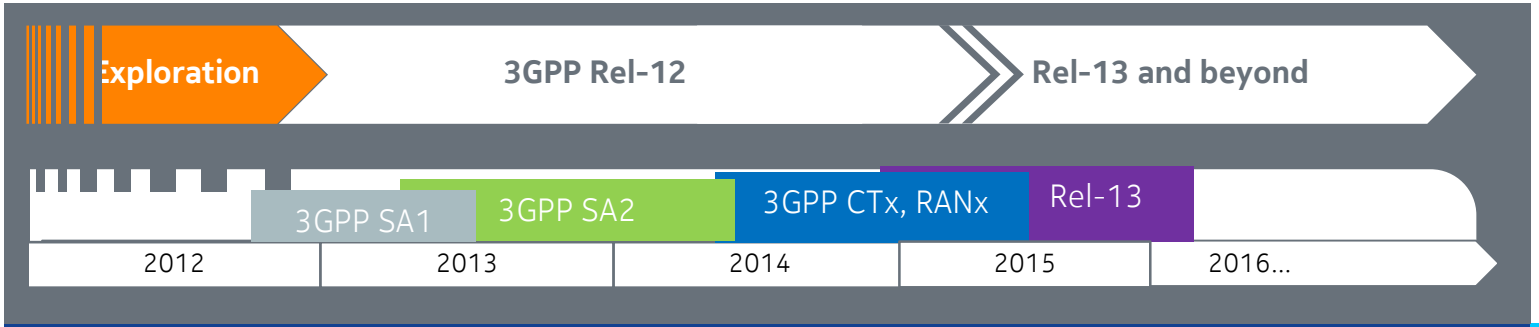

Rel-12:

1. Group Communication using LTE
2. Device to Device communication (also called Proximity Services, ProSe)

Rel-13:

1. Mission Critical Push To Talk
2. MBMS enhancements
3. Proximity Services (ProSe) extensions
4. Isolated E-UTRAN Operation for Public Safety

Rel-14:

1. Mission Critical Video
2. Mission Critical Data

Rel-12 finalized 03/15

Rel-13 finalized 03/16

Rel-14 targeted 06/17

© Nokia 2016

Balancing shared vs. dedicated resources in core network and radio access

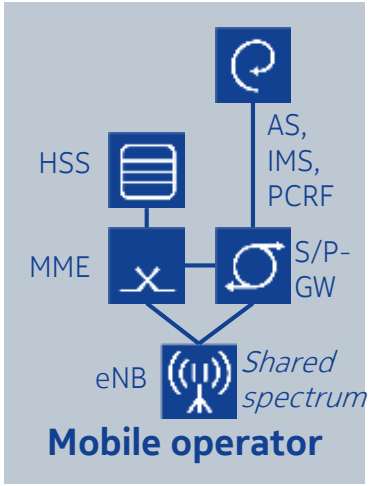

Hosted
public safety

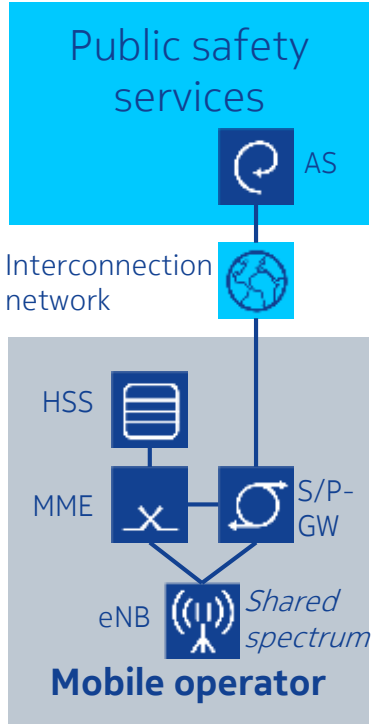

Public safety
OTT

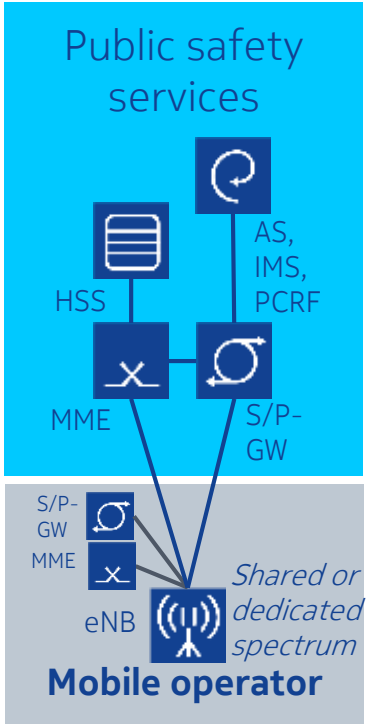

RAN sharing for
public safety

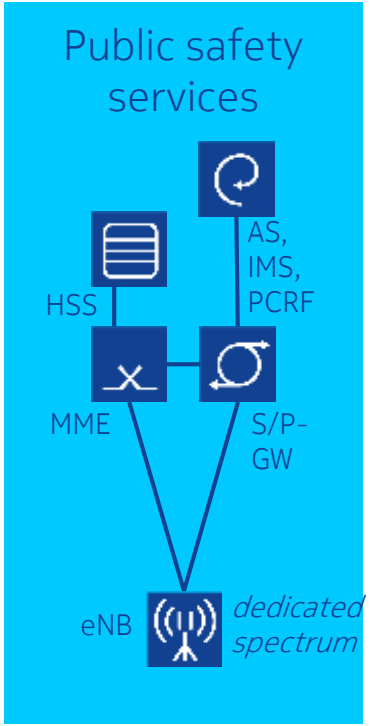

Dedicated LTE
network for
public safety

© Nokia 2016

User and service prioritization for public safety allow to share costly resources

Mission critical voice

Mission critical data

Emergency calls from public

Commercial voice

Commercial data

For prioritizing mission critical voice & data and emergency calls over non-mission critical and commercial voice & data, we can use access classes, admission control and pre-emption and quality of service parameters.

Access class defines the priority of the subscription so that emergency service user has higher access class priority than consumer.

Additionally emergency calls are handled as special high priority access class.

In case of high load mission critical connections are prioritized in admission control and lower priority connections can be pre-empted, if needed. Furthermore mission critical connections are prioritized for lower latency and higher throughput according to quality of service parameters.

© Nokia 2016

Hybrid sharing models for cost efficient, early broadband PPDR deployments

High degree of control over services, subscriptions, security etc.

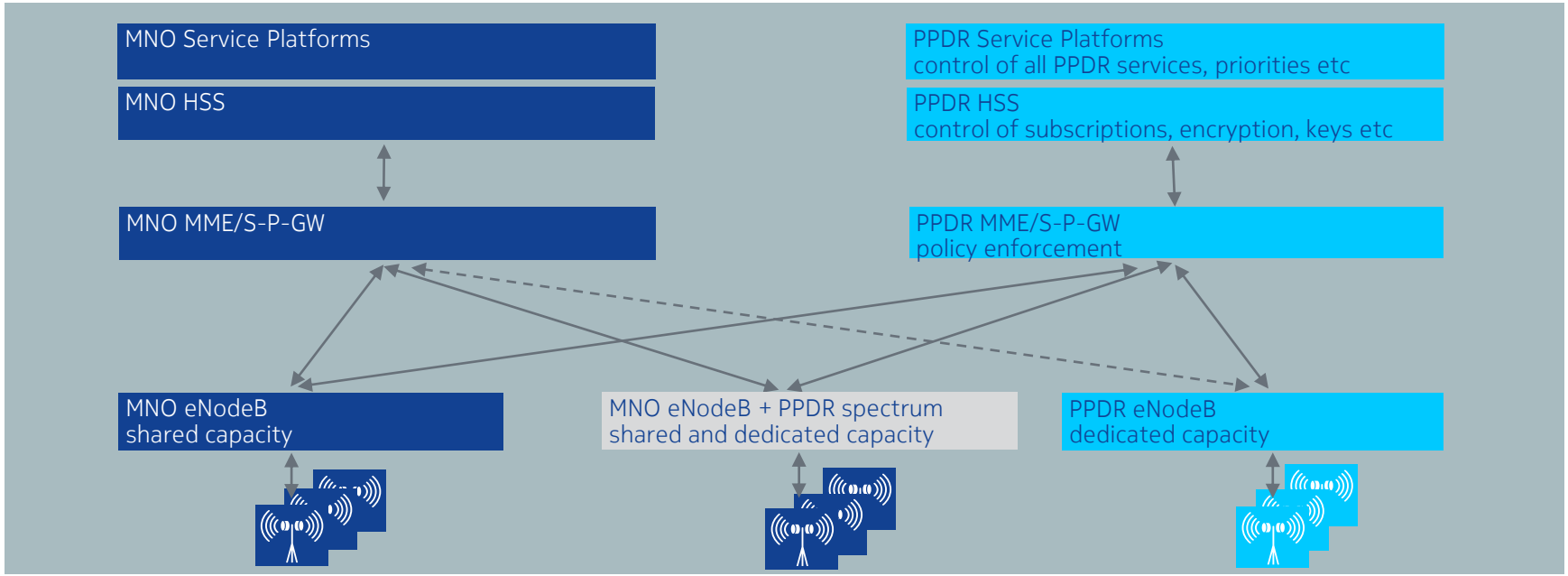

Multi Operator Core Network (MOCN*) for LTE in shared spectrum or in combination with dedicated PPDR frequencies

* 3GPP Rel. 8 (MOCN)

 © Nokia 2016

NOKIA

Flexible harmonisation as per ECC decisions (15)01 & (16)02 in the 700 MHz band

Allows for cost efficient options for shared and possibly also for dedicated radio access capacity

700 MHz PPDR Options based on 700 MHz Harmonised MFCN (ECC Decision (15)01)

Recommendations

- Consider shared capacity in commercial bands including higher bands
- Avoid exclusive reservations for PPDR within in Band 28 2x 30 MHz lower duplex
- If dedicated PPDR capacity is required, consider 2x5 and/or 2x3 with shared capacity from MNOs which leverages platform synergies (chip sets, infrastructure) with commercial 700 MHz solutions
- Consider operational synergies with commercial networks in 700 MHz range

Example: Germany

 © Nokia 2016

NOKIA

-42 dBm/8 MHz out-of-band emission requirement puts UE ecosystem at risk

DTT channel 48 protection is more than challenging in unconstrained PPDR UL operation

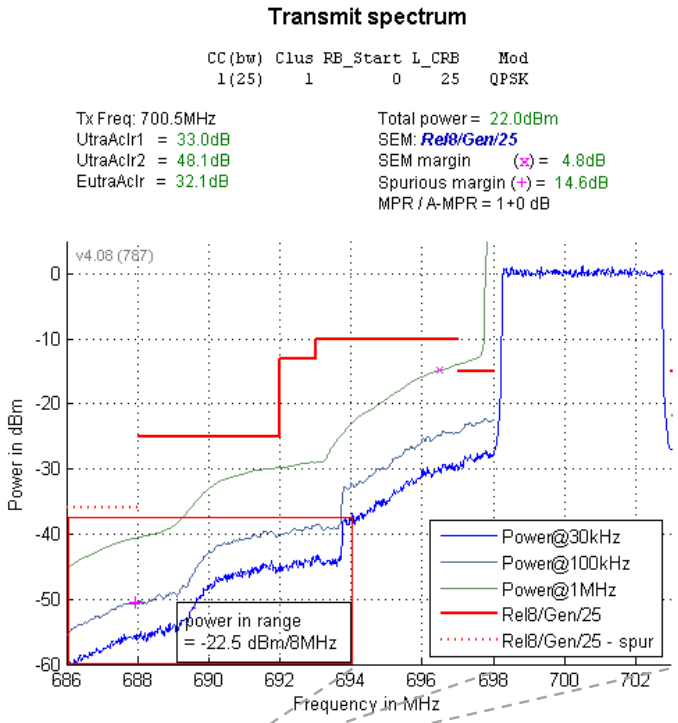

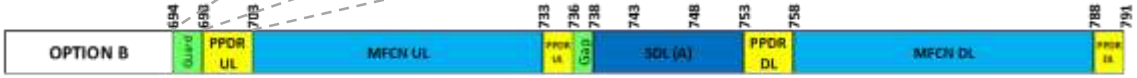

- DTT channel 47 and lower can be protected to the required level of -42 dBm/8 MHz
- DTT channel 48 in areas where used requires additional protection measures
- UL TX power limitation would reduce coverage
- UL TX bandwidth limitations moderately reduce UL capacity, but limit peak data rate

Solution proposal

- UL TX bandwidth limitations in DTT channel 48 areas, fully network controlled
- Specific UE type approval procedure to be defined by ETSI on top of 3GPP Band 68

 © Nokia 2016

NOKIA

Broadband PPDR communications' future is bright with LTE and its evolution

With LTE, PPDR can gain access to large and vital ecosystems

LTE PPDR solutions are ready now and quickly evolve further

There is no "black and white" regarding shared vs. dedicated resources: the degree of control for PPDR authorities is widely scalable

Hybrid solutions including shared and dedicated resources can be implemented rapidly and can gradually evolve as required

The 700 MHz band provides specific opportunities regarding economies of scale as well as economies in deployment and operations

 © Nokia 2016

NOKIA

Thank you!

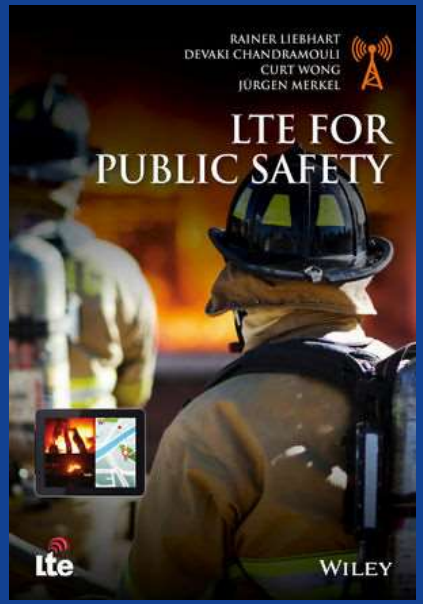

ulrich.rehfuess@nokia.com

http://www.wiley.com/WileyCDA/WileyTitle/productCd-1118829867,subjectCd-EEJ0.html

 © Nokia 2016

NOKIA